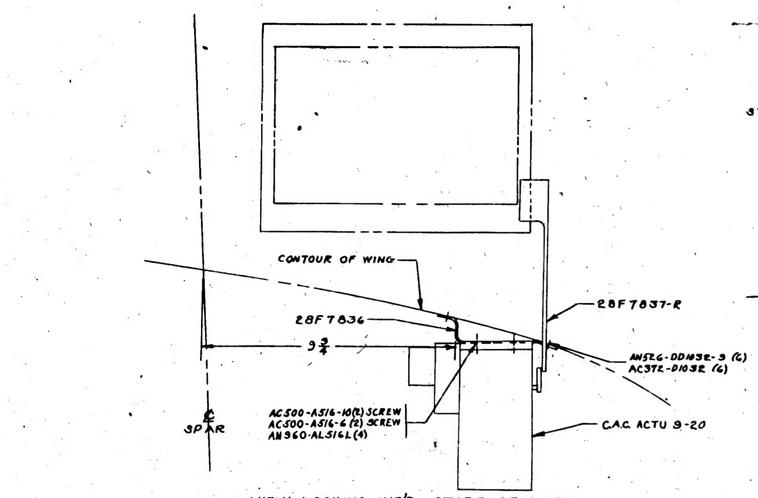

VIEW LOOKING INB'D. STARBOARD SIDE
SHOWING ACTUATOR INSTALLATION
FOR -3R ASS'Y

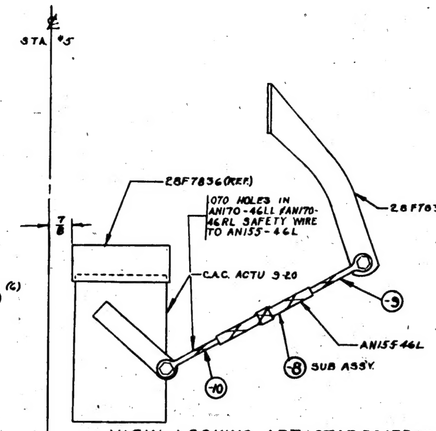

VIEW LOOKING AFT STARBOARD SIDE
SHOWING ACTUATOR INSTALLATION
FOR -3R ASS'Y.

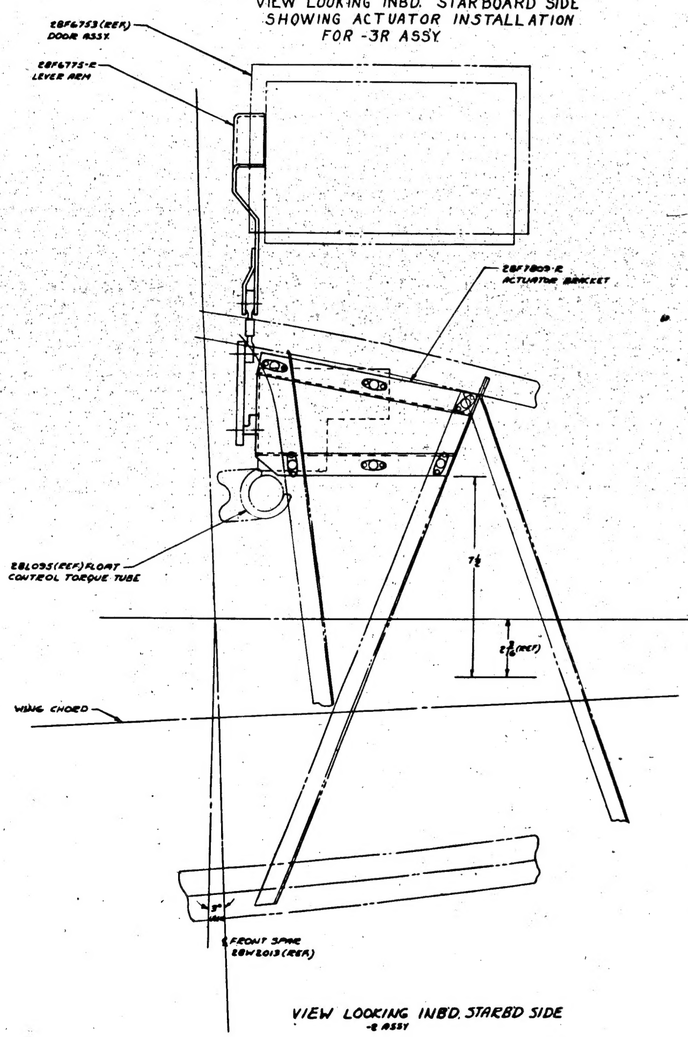

VIEW LOOKING INBD. STARBD SIDE
-2 ASSY

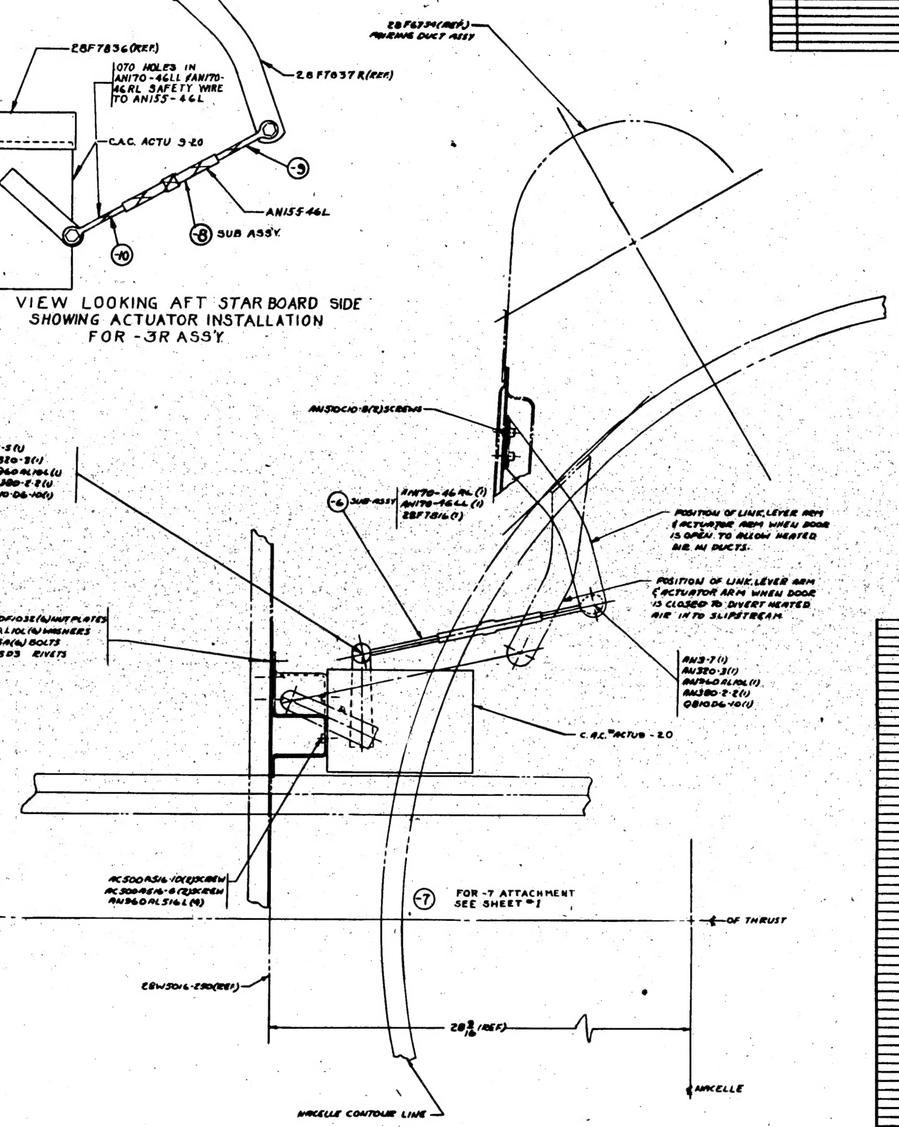

INSTALL. R.H. SIDE ACTUATING UNIT
VIEW LOOKING AFT, STARBD SIDE
-2 ASSY

NOTE: 28F-6982 NOT SHOWN TO AVOID CONFUSION THIS SHEET SHOWS ACTUATOR INSTALL. ONLY.

SHEET #2 OF 2

APPROVED FOR TOOLING BY

A	CAC ACTU 9-20 W/A-7						
	CAC ACTU 3 W/ACR						
B	AN960-7-AN310-D6-AN4						
	AC372-D832-AN4 W/FAN WA						
C	CREATED - RARK W/COMBA						

PART NO.	STOCK	MATERIAL	SPEC.	LH	RH	LH	RH	LH	RH	LH	RH
				REQ.	REQ.	REQ.	REQ.	REQ.	REQ.	REQ.	REQ.
PARTS LIST FOR ASSY.				-0	-2	-3	-4	-5			

SEE SHT #1 FOR REV

A.G.
SHIFT
RIGHT THRUST
FINISH

NAME INSTALL - FORWD - ACTUATOR & NACELLE DUCT - HEAT ANTI-ICING SYSTEM

CONSOLIDATED AIRCRAFT CORP. Vultee Divisions, San Diego

SIZE J
28F7811
SHEET 2 OF 2

H 434